WORX
it's your nature

Owner's manual

**WR140E**

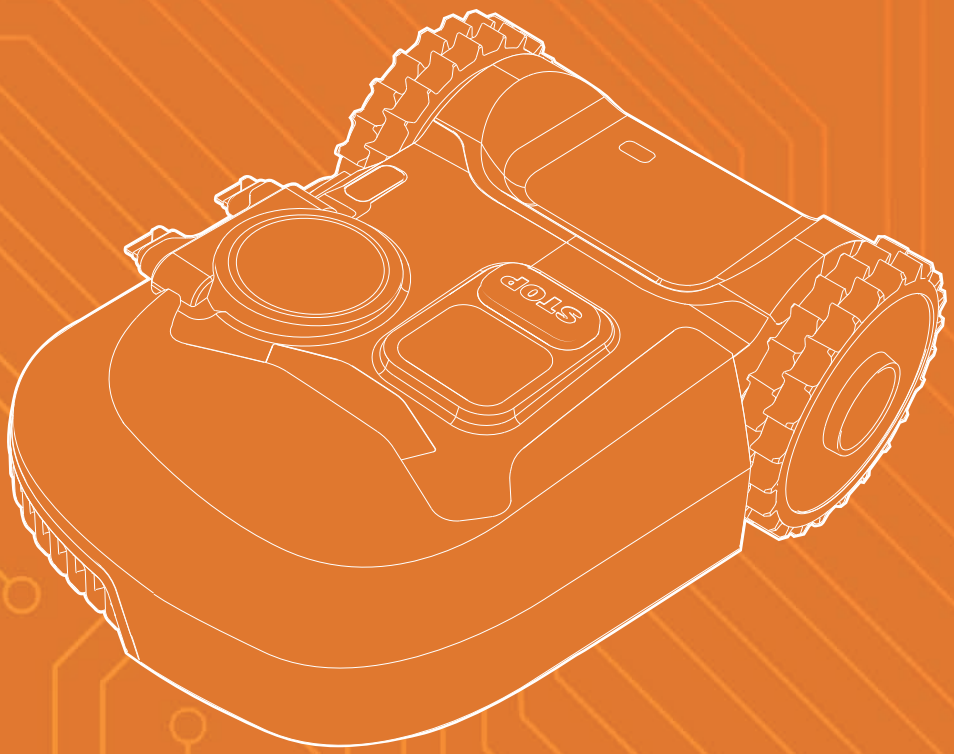


LANDROID
UNMANNED
MOWING
VEHICLE

# TABLE OF CONTENTS


| | |
|---|---|
| | **Welcome** |
| pag. 03 | Contact information |
| | **Safety first** |
| pag. 04 | Important safety instructions |
| | **Get familiar with Landroid** |
| pag. 06 | What's in the box |
| pag. 07 | Getting to know Landroid |
| pag. 08 | How Landroid works |
| | **Getting started** |
| pag. 10 | Planning |
| pag. 13 | Installation |
| pag. 17 | Starting Landroid |
| pag. 19 | Connecting Landroid to the Internet |
| pag. 21 | Using the App |
| pag. 22 | Landroid options |
| | **Maintenance** |
| pag. 23 | Keep it sharp |
| pag. 24 | Keep it clean |
| pag. 25 | Keep it charged |
| pag. 25 | Keep it stored over the Winter |
| pag. 25 | Keep it updated |
| | **Quick reference** |
| pag. 27 | Manual programming |
| pag. 30 | Operation messages |
| pag. 31 | Error messages |
| pag. 34 | Trouble shooting |
| pag. 38 | Technical data |

**Thank you for purchasing a Worx Landroid Robot Mower.**

Totally autonomous, fully configurable, agile and efficient, Landroid manicures your grass and gives you the best lawn ever. This manual will help you get set up.

## We're here to help:

**Support**

www.worx.com/support

**Landroid Owner's Site**

www.worx.com/mylandroid

**Customer Services Helpline**

AUSTRALIA: 1300 889 028

NEW ZEALAND: 0508 778899

# IMPORTANT SAFETY INSTRUCTIONS. KEEP FOR FUTURE REFERENCE.

⚠ **Attention:** read all safety warnings and all instructions for the safe operation of the machine. Failure to follow the warnings and instructions may result in electric shock, fire and/or serious injury.

- Landroid is not intended for use by persons (including children) with reduced physical, sensory or mental capabilities, or lack of experience and knowledge, unless they have been given supervision or instruction concerning use of the appliance by a person responsible for their safety
- Children should be supervised to ensure that they do not play with Landroid
- Landroid is only to be used with the power supply unit provided with it

**Safety guidance before use**

- Read the instructions carefully. Make sure you understand the instructions and be familiar with the controls and the proper use of Landroid
- Never allow people unfamiliar with these instructions or children to use Landroid
- The operator or user is responsible for accidents or hazards occurring to other people or their property

**Preparation before use**

- Ensure the correct installation of boundary wire as instructed
- Periodically inspect the area where Landroid is to be used and remove all stones, sticks, wires, bones, and other foreign objects
- Periodically visually inspect to see that the blades, blade bolts and cutter assembly are not worn or damaged. Replace worn or damaged blades and bolts in sets
- Turn off Landroid, remove the battery, wear protectives gloves and take care when inspecting blades, as rotating one blade can cause other blades to rotate

⚠ **WARNING!** The lawnmower should not be operated without the guard in place

**Safe Operation**

- Never operate the appliance with defective guards or without the guard in place
- Do not put hands or feet near rotating parts
- Never pick up or carry Landroid while it is running
- Turn off the machine and remove the battery before clearing a blockage and before checking, cleaning or working on Landroid
- It is not permitted to modify the original design of Landroid. All modifications are made at your own risk
- Start Landroid according to the instructions. When the power key is switched on, make sure you keep your hands and feet away from the rotating blades.
- Never lift up Landroid or carry it when the power is switched on
- Do not put anything on top of Landroid or its charging station
- Do not allow Landroid to be used with a defective blade disc or body. Neither should it be used with defective blades, screws, nuts or cables
- Switch off Landroid when you do not intend to use it for a long period of time
- Landroid can only start when the power is switched on and the correct PIN code has been entered
- Avoid using Landroid in bad weather conditions especially when there is a risk of lightning
- Do not touch moving hazardous parts before these have come to a complete stop
- Do not leave Landroid to operate unattended if you know that there are pets, children or people in the vicinity

## MAINTENANCE AND STORAGE

⚠ **Attention:** When the mower is turned upside down the power key must always be switched off. The power key should be switched off and the battery removed during all work on the mower's under frame, such as cleaning or replacing the blades.

- Do not wash Landroid with a pressure washer—due to the high pressure, water can go inside Landroid and damage the electronic circuit
- To avoid injuries, wear protective gloves when replacing the blades
- Keep all nuts, bolts and screws tight to be sure Landroid is in safe working condition
- Inspect Landroid each week and replace worn or damaged parts for safety
- Ensure that only replacement blades of the right type are used
- Ensure that batteries are charged with Landroid's charging station. Incorrect use may result in electric shock or overheating of the battery
- Servicing of Landroid should be according to manufacturers' instructions

### Recommendation

Please only connect Landroid charger station power supply (PSU) to a supply circuit protected by a residual current device (RCD) with a tripping current of not more than 30 mA.

### Safe transport

- The original packaging should be used when transporting Landroid over long distances
- To safely move Landroid within the working area:
    - press the STOP button to stop the mower
    - carry the mower with the blade disc away from the body

### Battery safety

- Do not dismantle, open or shred battery pack
- Do not short-circuit the battery pack. Do not store battery packs haphazardly in a box or drawer where they may short-circuit each other or be short-circuited by conductive materials
- When the battery pack is not in use, keep it away from metal objects, like paper clips, coins, keys, nails, screws or other small metal objects that can make a connection from one terminal to another. Shorting the battery terminals together may cause burns or a fire
- Do not expose the battery pack to heat or fire. Avoid storage in direct sunlight
- Do not subject the battery pack to mechanical shock
- Seek medical advice immediately if a cell or battery pack has been swallowed
- Keep the battery pack clean and dry
- The battery pack gives its best performance when it is operated at temperature around 20°C
- When disposing of battery packs, keep battery packs of different electrochemical systems separate from each other
- Recharge only with the charger specified by Worx. Do not use any charger other than that specifically provided for use with Landroid. A charger that is suitable for one type of battery pack may create a risk of fire when used with another battery pack
- Do not use any battery pack which is not designed for use with the equipment
- Keep the battery pack out of the reach of children
- Dispose of battery properly. Return exhausted batteries to your local collection or recycling point

### Class III appliance

- Waste electrical products must not be disposed of with household waste. Please recycle where facilities exist. Check with your local authorities or retailer for recycling advice

⚠ **WARNING!** Landroid can be dangerous if incorrectly used. Read through the Operator's Manual carefully and understand the content before using your Landroid
⚠ **WARNING!** Keep a safe distance from the machine when operating
⚠ **WARNING!** Turn the machine off and remove the battery before working on or lifting the machine
⚠ **WARNING!** Do not ride on the machine

# WHAT'S IN THE BOX

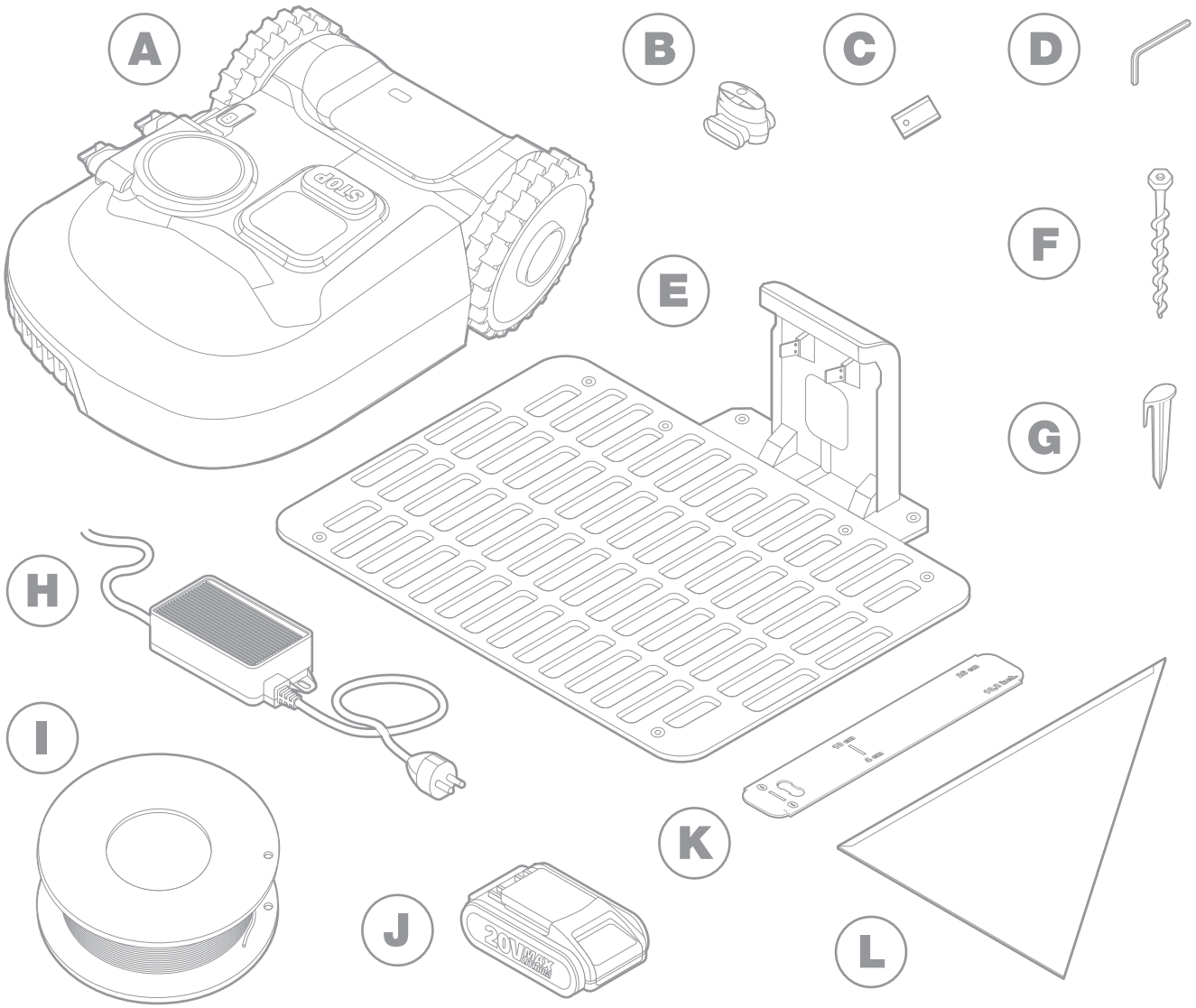


| | | | |
|---|---|---|---|
| **A** | 1 Worx Landroid M | **G** | wire pegs x 250 |
| **B** | 2 wire repair connectors | **H** | 1 power supply |
| **C** | 3 spare blades kits | **I** | boundary wire 180m |
| **D** | 1 Allen key | **J** | 1 20V 4.0Ah battery |
| **E** | 1 charging base | **K** | 2 boundary wire distance gauges |
| **F** | 8 screws | **L** | 1 Bertelsen ruler |

# GETTING TO KNOW LANDROID

A

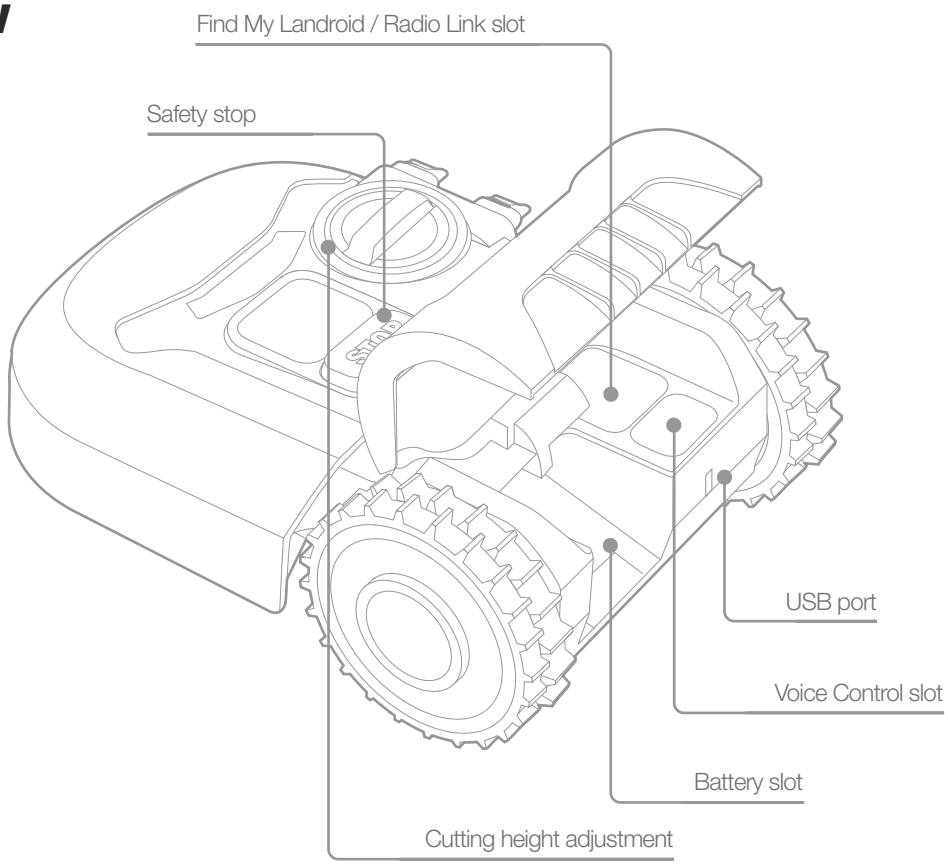


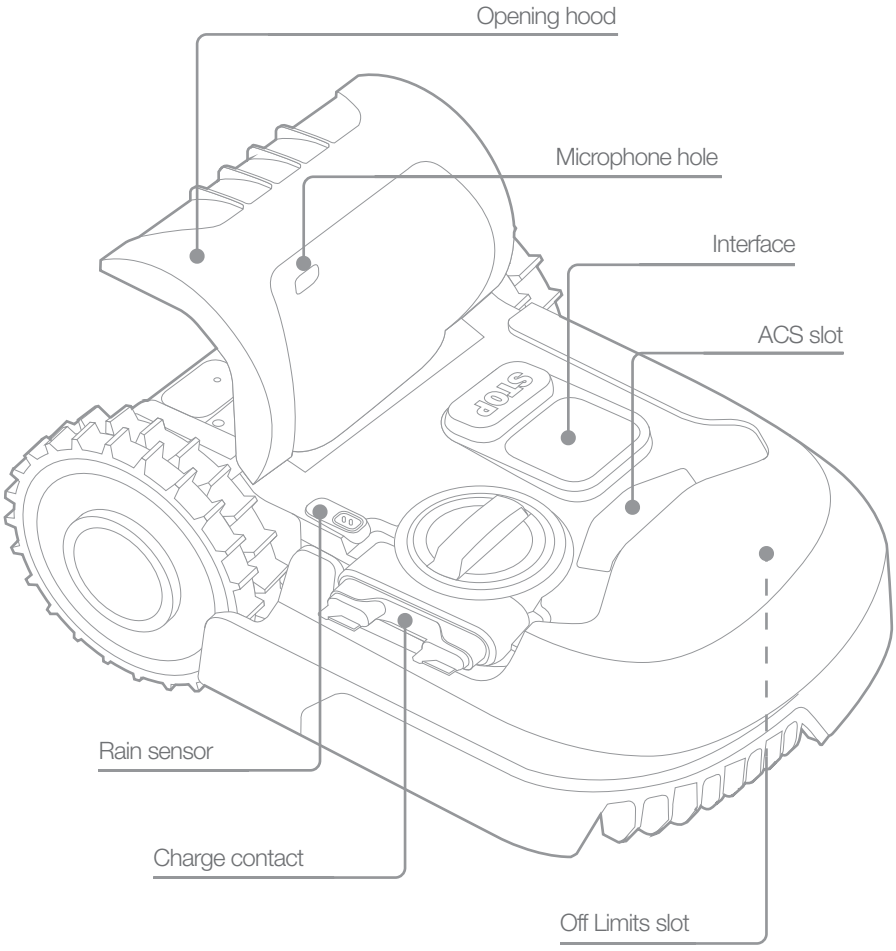


B

# HOW LANDROID WORKS

In the following section, we would like to help you better understand how Landroid works.
Landroid is an autonomous machine, capable of operating on its own. It knows when it needs to go to its charging base, can sense when it is raining, can stop itself if it senses a problem and knows to stop, draw back, and turn around when it bumps into something blocking its path. To prevent an accident, Landroid will also automatically stop its blade disc from rotating if it is lifted off the ground.

### Smart auto scheduling

Landroid programs itself, learns about your lawn and builds the perfect schedule for it. Using cloud computing, Landroid continuously fine-tunes mowing cycles to the actual growth rate of your grass. Even though you can manually program it, we recommend you take advantage of this advanced auto-scheduling by connecting Landroid to the internet and using the free Landroid app.

### Charges itself

When your Landroid needs to recharge, it will stop mowing and follow the boundary wire in an anti-clockwise direction back to its charging base. Once charging is complete, Landroid will automatically resume mowing or stay in the charging base according to its mowing schedule.

### Border management

Landroid is programmed to mow the grass along the perimeter of your lawn once a week on Monday. If you want to change this pre-set, you can modify it via your smartphone or by using the control panel in “Work time-Customise Work time” menus.
See detailed instructions at the end of this manual.

### Rain sensor

Landroid is 100% weather proof and happy to be outside. But mowing wet grass does not give you the best finish or result. Landroid is equipped with a rain sensor which detects rain and tells Landroid to stop mowing and go back to its charging base.

### Rain delay time

After a rainfall, Landroid re-starts when the grass is no longer wet. The default Rain Delay time is 180 minutes. You can change the Rain Delay time setting via Landroid App or by using the control panel. See detailed instructions at the end of this manual.

### In more extreme weather...

In case of a lightning storm, protect Landroid by unplugging the charging base, disconnecting the boundary wire, and making sure Landroid is not allowed to charge. In the Winter and especially in case of very cold weather and snow, we recommend you store your Landroid inside. In some countries we offer a Winter servicing of your Landroid so it's ready for the Spring growing season. Contact your dealer or check online for more details.

### No more grass clippings to collect

Landroid's daily mowing produces very short clippings that don't need to be raked. These clippings are a perfect organic nutrient for your lawn. Frequent mowing boosts the density of grass blades and effectively prevents the propagation of weeds.

### Cut to edge

Landroid M and L models have a cut to edge feature. The special offset blade gets as close as possible to the border of your lawn, leaving you little or no trimming to do.

### Cutting Height

Landroid's cutting height can be adjusted between 30mm-70mm at 10mm steps. Before starting your Landroid for the first time, make sure your grass is no longer than 10cm. If longer, use a regular mower to cut it before operating Landroid. If you want to drastically shorten the height of your grass, it is recommended that you do so progressively, by adjusting the cutting height in steps.

### Security & PIN Protection

To prevent unauthorised people from being able to use it, Landroid is protected by a PIN code that you can easily set up. If Landroid is connected to your Wi-Fi network, you can lock it on your smartphone through the app. If additional security is required, we even have a Find my Landroid option which allows you to track your Landroid via a built in pre-paid SIM.

# INSTALLING LANDROID YOURSELF? EASIER THAN YOU MAY THINK

Installing your Worx Landroid is easier if you carefully follow these instructions. In the end, it is a matter of installing the charging station and laying the boundary wire all around your lawn. In addition to this manual, you can use the Get Started guide that's inside the box and watch the comprehensive video tutorials on our YouTube channel*.

* This information is provided for your convenience but does not replace the instruction manual and the safety instructions that needs to be read and understood.

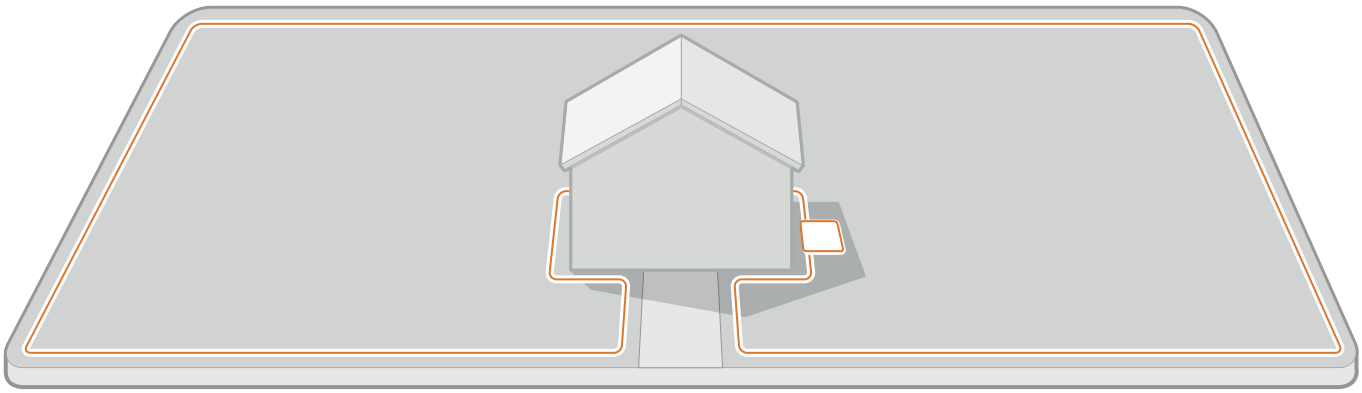

Patrol your lawn to plan installation

Install the charging station

Lay the boundary wire

Connect charging station to AC

Power up Landroid. Test and get ready to mow

## EVERY MINUTE SPENT IN PLANNING SAVES YOU 10 MINUTES IN EXECUTION

Installing Landroid is even easier if you have made a clear idea of what you need to do. A proper planning will also help you avoid mistakes or having to rework the installation once it's done.

### On the surface or buried?

Landroid's boundary wire is designed to stay on the surface of your lawn. Nearly invisible from the first day, it will be engulfed in the soil in a few weeks. If you will want to bury the wire, it is recommended to first peg it down and test the installation is successful by running Landroid over the perimeter. This allows you to easily check everything and, if necessary, change the layout before burying the wire. Bury the wire no more than a few centimetres below ground level, so that the wire ensures good signal.

### Plan for the charging station

The charging station is where your Landroid goes to have its battery recharged. It's also the parking lot where it rests in between one mowing session and the next.
Locate a proper position for it, bearing in mind:

- It needs to be powered, so it should be no more than 10m away from an AC mains outlet
- If possible, choose a shaded position as batteries and chargers don't like over-heating
- The base needs to sit on flat land to ensure effective docking
- Avoid places close to irrigation sprinklers

You can place the charging station on your lawn or on a hard surface like a walkway, provided that the lawn and the hard surface are at the same height (no steps).

To enter the station, Landroid needs at least 80cm straight path in front. On the exit side, it needs at least 30cm straight path before a left turn (fig. 1). If the turn is to the right, there is no need for a straight path (fig. 2).

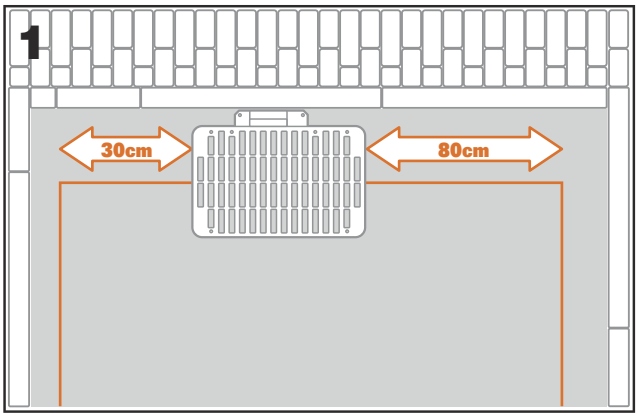


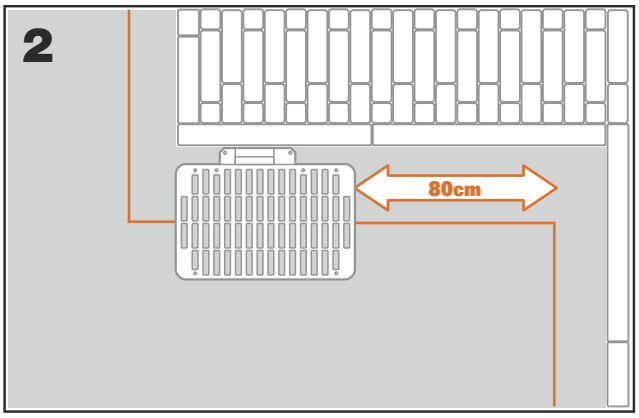


**Charging station checklist:**

- ☐ within reach of AC mains
- ☐ in shade
- ☐ straight path on entrance; straight path on exit if necessary
- ☐ flat land
- ☐ no irrigation sprinklers nearby

**Plan for the boundary wire**

The wire has to be placed at a certain distance from the edge of the lawn. This distance changes depending on what's on the other side of the edge. Different parts of your lawn may border different scenarios:

1. If the edge of the lawn borders a step: keep the wire 26cm from the edge.
2. If the edge of the lawn borders a path at the same height: keep the wire 10cm from the edge.
3. If the edge of the lawn borders gravel: keep the wire 26cm from the edge, as Landroid's wheels may slip on gravel.

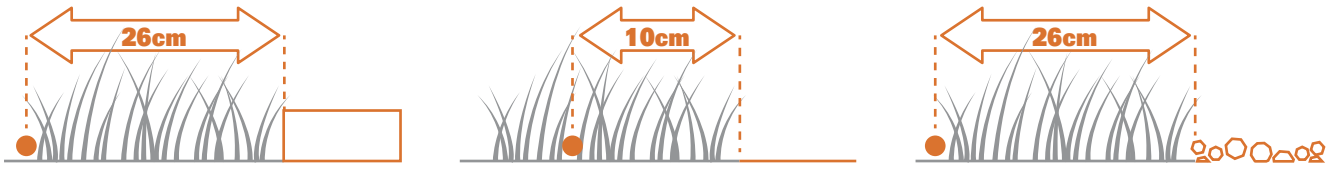


If a side of your lawn borders a neighbor's lawn with a robotic mower in use, lay your wire 1m apart from your neighbor's wire to avoid possible interference.

# PATROL YOUR LAWN

Landroid is designed to manage the most complex of lawns. Carry out a visual inspection of your lawn so you are prepared for a trouble-free installation of the boundary wire.

### Identify forbidden areas

You don't want your robot mower to behead flowers, dive into a water feature, or shred tree roots that emerge from the ground. Locate these areas and surround them with boundary wire to prevent Landroid from accessing them.

The boundary wire is a single loop connected on both ends to the charging station, so you will have to depart with the wire from the border, surround the area you want to protect, then take the wire back to the border as illustrated here in fig. 1.
If areas to be surrounded are far away from the border of your lawn, or if you have several areas and tree roofs to protect, this traditional method is time consuming.

A great alternative is to purchase Landroid's Off-Limits option. With this, you simply surround forbidden areas with the Off-Limits digital fence, which does not need to be connected to the boundary loop (fig. 2). The Off-Limits digital fence is also great to protect seasonal equipment (e.g. a trampoline) or for protecting new changes to the layout of your lawn without having to rework the boundary wire.

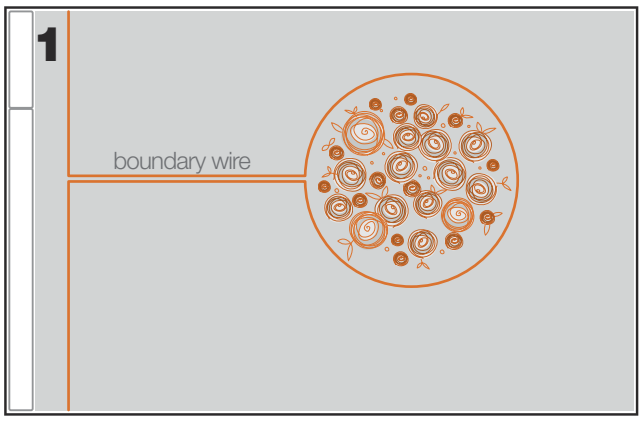


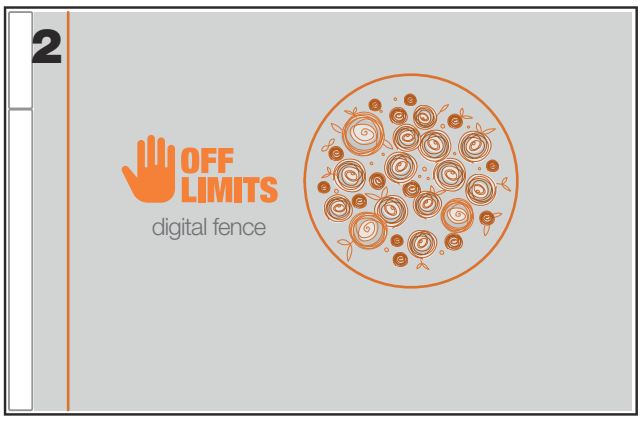


### Identify obstacles

Landroid's bump sensor can manage solid obstacles such as trees, furniture and the like, which don't need to be surrounded by wire. If your lawn has several obstacles and trees close to each other, we recommend you to purchase the Landroid ACS option, an intelligent ultrasonic auto-pilot that makes your Landroid steer around obstacles instead of bouncing into them.

# NOW ROLL YOUR SLEEVES UP. WHEN IT'S DONE IT'S DONE!

Now that you have planned the installation in every detail, you are ready to take action. Before starting, you may want to use your old mower for the last time to clean up your lawn and make the installation easier.

**Fix the charging station in the selected location**

- Secure the base to the ground by means of the supplied screws, using the supplied Allen key (fig.1)
- If you position the base on hard surface, fix it with plug and screw fixings (not supplied)

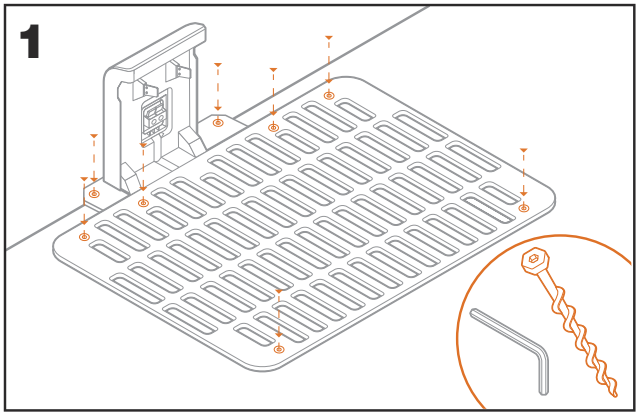


**Connect one end of the boundary wire to the charging station**

- Strip the end of the wire with a pair of scissors (fig. 2)
- Open the plastic door and insert the stripped end into the red left clamp (fig. 3)
- Pass the wire through the guide of the base, as shown in fig. 3

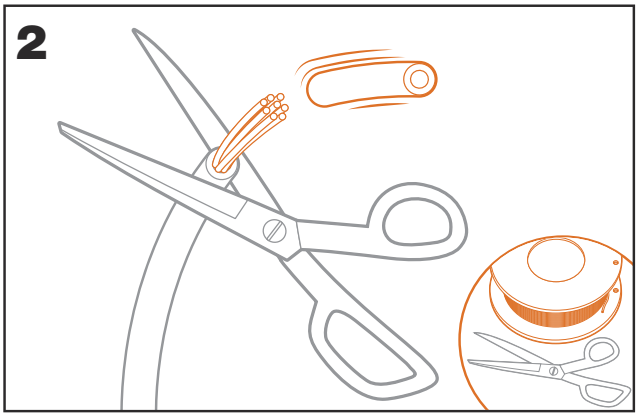


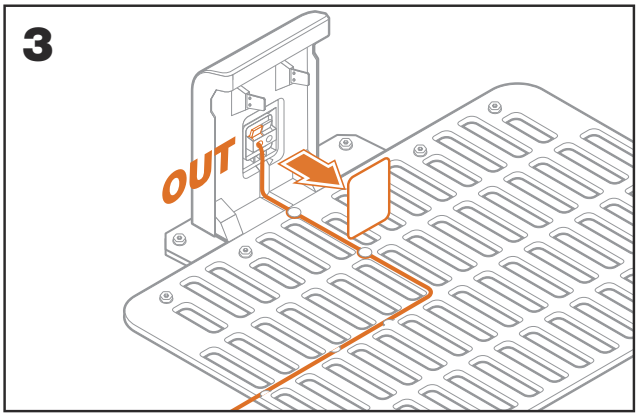


**Lay the boundary wire around your lawn**

- Use the supplied gauge to set the distance wire to edge
- If there is a step at the edge of your lawn, keep the wire at 26cm from it (fig. 4)
- If there is no step, keep the wire at 10cm from the edge (fig. 5)

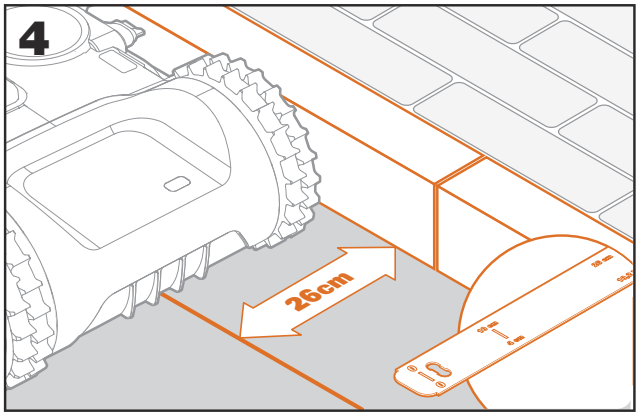


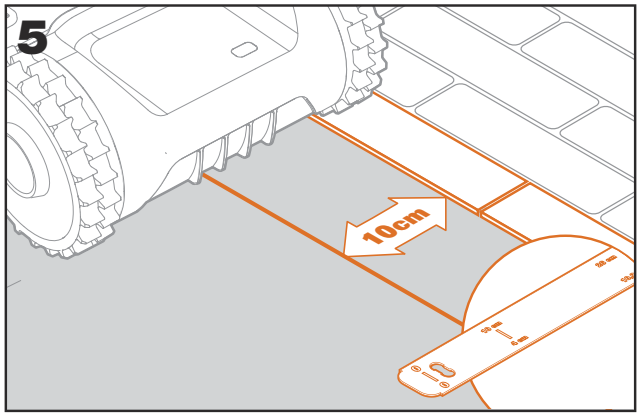

**Secure the wire to the ground using pegs**

- Place pegs at approximately 80cm to each other (fig. 6)
- Make sure the wire is always in close touch with the ground (fig. 7)

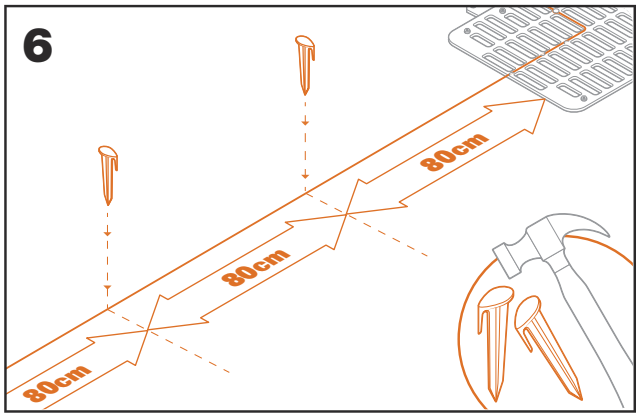


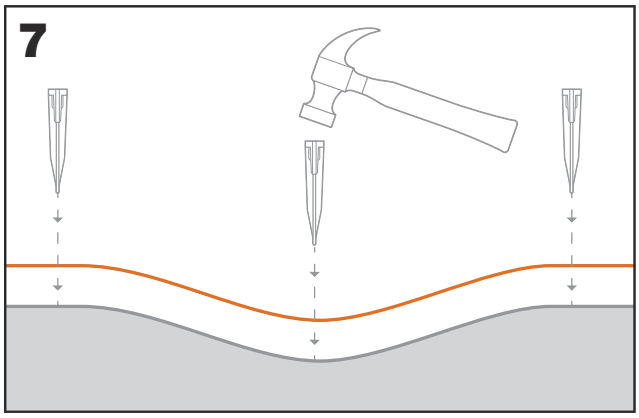


**Lay perimeter islands, if needed**

- Protect flower beds, ponds, tree roots and other areas by surrounding them with the boundary wire
- Depart the edge at a right angle to reach the area to be protected
- Surround the area with the wire, keeping 26cm distance, until you close the island
- Always lay the wire clockwise. Failing to do so will make the mower drive into the island
- Return to the edge of the lawn following the same path

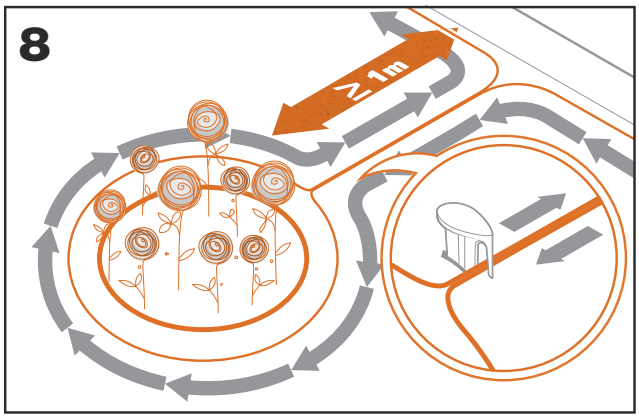


**Bertelsen method: how to make perfect 90° angles with corners facing the lawn**

If there are 90 degree corners that face the inside of your lawn, use the Bertensen ruler to help Landroid make perfect turns (and remove the risk that Landroid hits an obstacle on the border of the lawn whilst doing this manoeuvre).

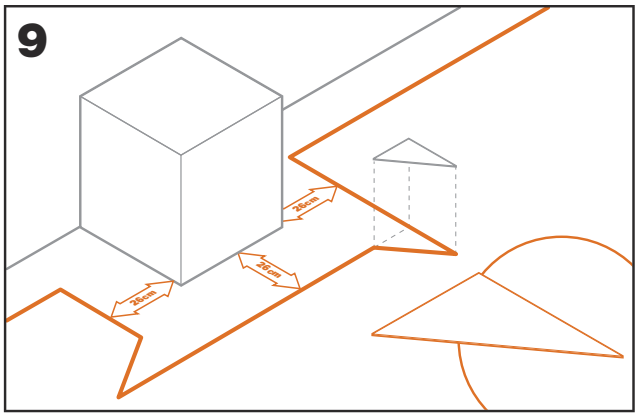

**Close the loop**

Once you have completed laying the wire on the perimeter of your lawn, you will arrive back to the charging base.

- Pass the wire through the guide in the base, up to the clamp (fig.10)
- Cut the exceeding wire and strip the end with a pair of scissors
- Insert the stripped end into the black right clamp

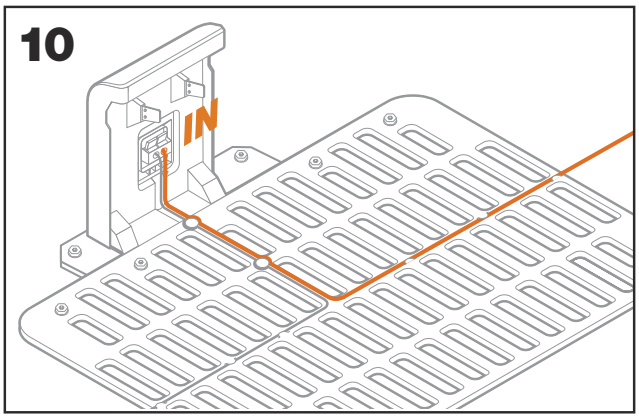


**Final steps**

The boring part is over! There are only a few more steps to go:

- Connect the charging station to the AC mains socket (fig. 11)
- If everything is fine, the LED will light green
- If there's a trouble in the loop, such as broken wire or wire ends not properly clamped, the LED will turn red. Check that everything is fine and see the FAQ session if the problem persists

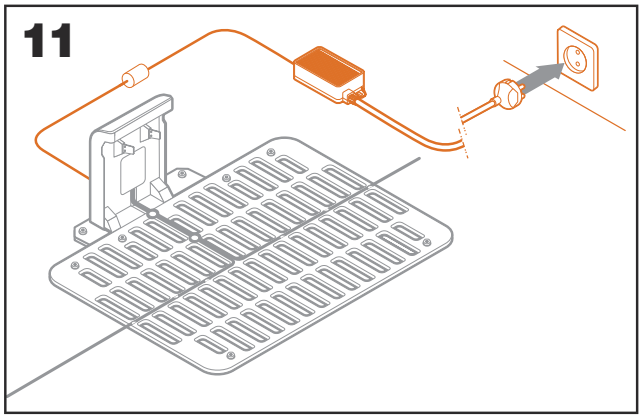


- Open the rear of Landroid and insert the PowerShare battery into the slot until it clicks (fig.12)

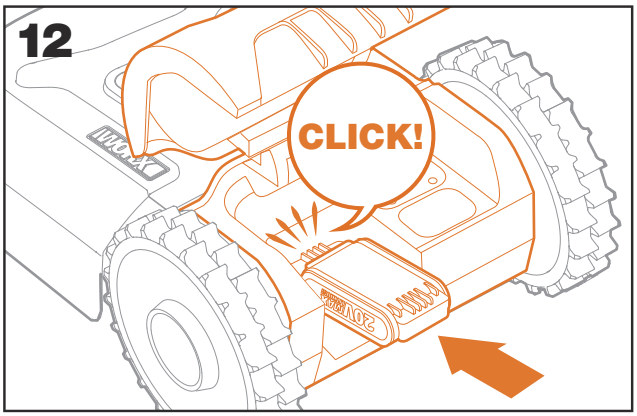

- Place Landroid on charge by making sure a good contact is established with the base (fig. 13). The LED will blink green; once the battery is fully charged, the LED will turn solid green.

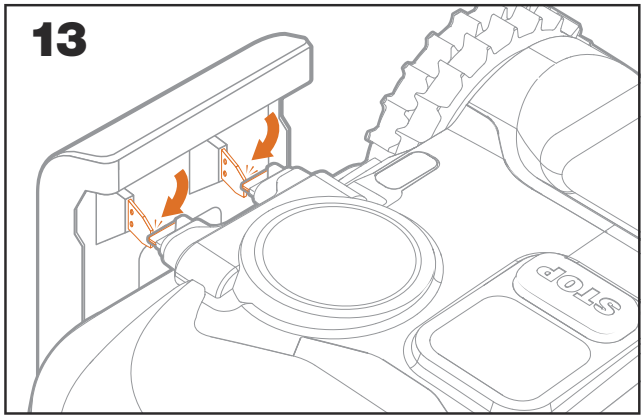


Let Landroid charge the battery for a while. Whilst it is charging you may want to take a well-deserved break: get familiar with the following instructions, and connect Landroid to your Wi-Fi network.

**Joining up the boundary wire**

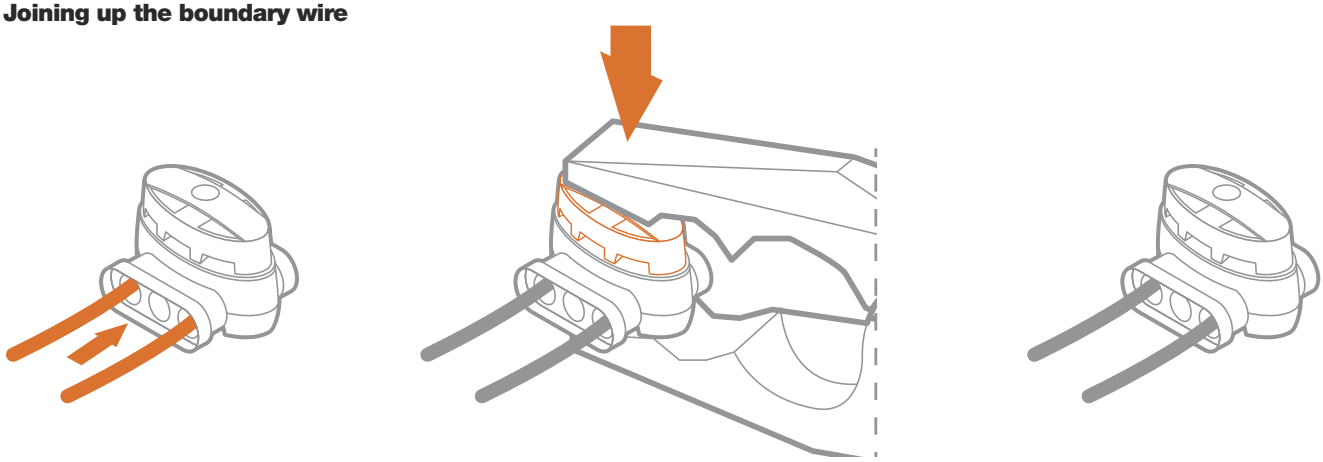

Landroid box includes two small, waterproof boundary wire connectors. They can be used for the following:
- When your lawn has a very long perimeter and you need extra boundary wire to complete the installation. Please do not exceed 350m of boundary wire: this is the maximum length of the boundary wire perimeter
- When the bounday wire is cut by accident and you need to fix it
- When you decide to rework your garden in the future and need to modify the original boundary wire installation

The connectors are waterproof and provide optimal electric connection.
- Insert both ends of the wire into any two of the three holes of the connector; no need to strip the wires
- Insert the wires fully until both wire ends are visible on the other side of the connector
- Press the connector firmly by using a pair of pliers

⚠ **Attention:** it is not recommended to simply splice the boundary wire with insulating tape or use a screw terminal block for connection. A broken circuit may occur after a period of time as soil moisture can oxidize the wire.

# NOW FOR THE EXCITING BIT!
# START LANDROID FOR THE FIRST TIME.

### Get familiar with the control panel

Landroid's control panel provides the key functions in a minimalistic design.
For advanced functions, the free Landroid app provides further options in a richer interface: your smartphone.

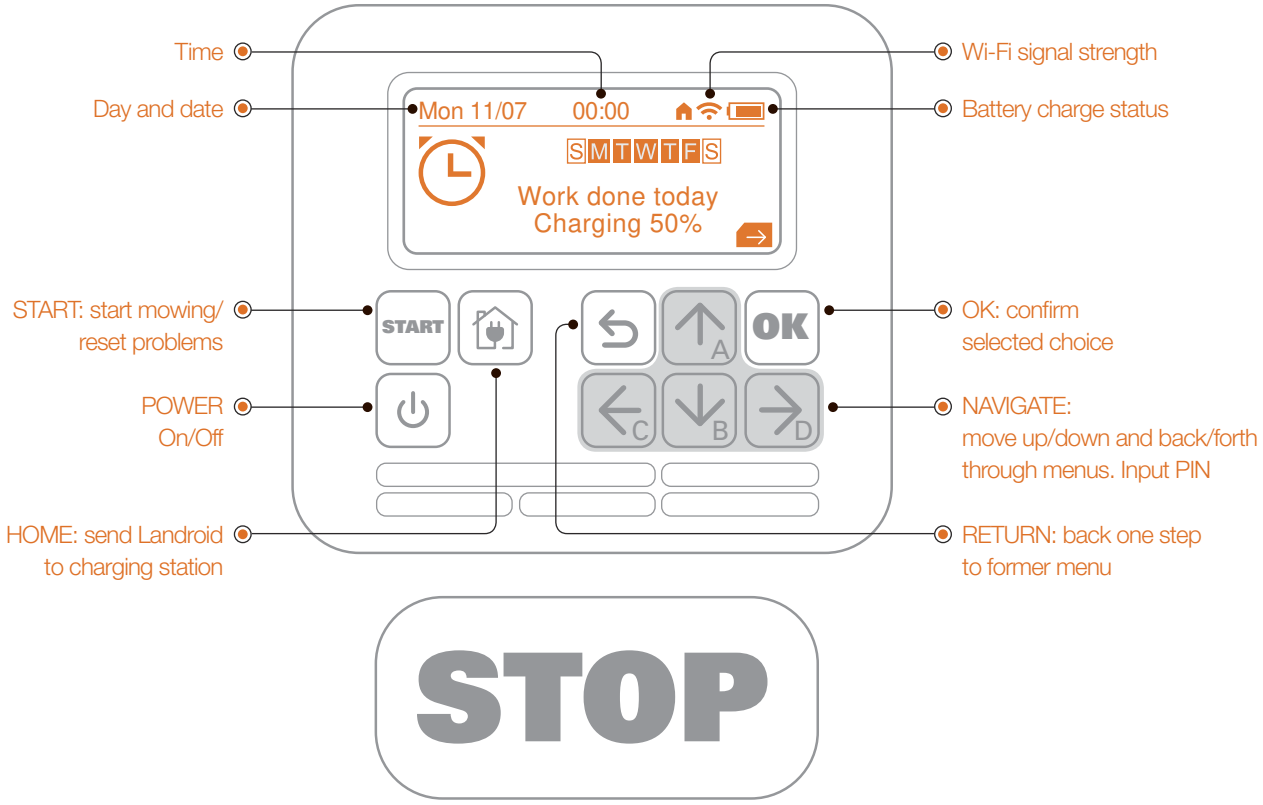


### Start Landroid

- Place Landroid inside the boundary wire
- Press the On/Off button until the screen displays 'Welcome'
- The display prompts input of PIN
- Input the default PIN AAAA by pressing the ↑ (A) key four times
- The screen displays 'PIN code OK'
- Press the START button, then press OK. Landroid will start mowing
- You can stop Landroid at any time by pressing the STOP button
- To send Landroid to the charging station, press the Home key, then press OK

### Change PIN

To make your Landroid safer and more secure, change the default AAAA PIN to a PIN of your choice.

- Turn Landroid on and unlock it by inputting the default PIN
- Press the → (D) key
- Select the padlock icon by using the → and ← Navigate buttons, then press OK
- Screen displays 'Change PIN code'. Press OK to start the procedure
- Screen displays 'Old PIN'. Input the default PIN AAAA

- Screen displays ‘New PIN’. Compose your new PIN using the ABCD keys
- Your will be asked to repeat your new PIN
- If the two inputs match, the screen will confirm

⚠ **Important**

Write down the PIN and keep it in a safe place. For extra security, register your Landroid and record your PIN on the Worx website. We will store it safely and you will always be able to retrieve it from the My Landroid section of the website.
Please note that in case you lose your PIN, you will not be able to operate Landroid. In order to make Landroid as secure as possible, there is no reset procedure for the PIN that can be operated by anyone, including Landroid authorized service centers.
If you decide to sell your Landroid in the future, please restore the factory default AAAA PIN before delivering it to the new owner, or give your personalized PIN to the new owner.
If you are delivering your Landroid to a Service Center, please let them know your PIN.

**Changing the language setting**

Landroid is pre-set to the language in the country where you bought it. However, if you want to change the language, please follow the following steps.

- Turn on Landroid and insert PIN
- Press the → (D) key; screen displays the menu
- Select the gear icon with the navigation keys, confirm with OK button
- At top of General Settings list is ‘Language’
- Press OK to select
- Scroll down the menu to select your language
- Press OK to confirm

# CONNECTING LANDROID TO THE INTERNET

**Why connect Landroid**

Landroid is an IoT (Internet of Things) device. To get full functionality out of your Landroid and keep it always updated to the latest software, it must be connected to the internet via your Wi-Fi network or by using Find My Landroid Accessory.

**BEFORE YOU START**

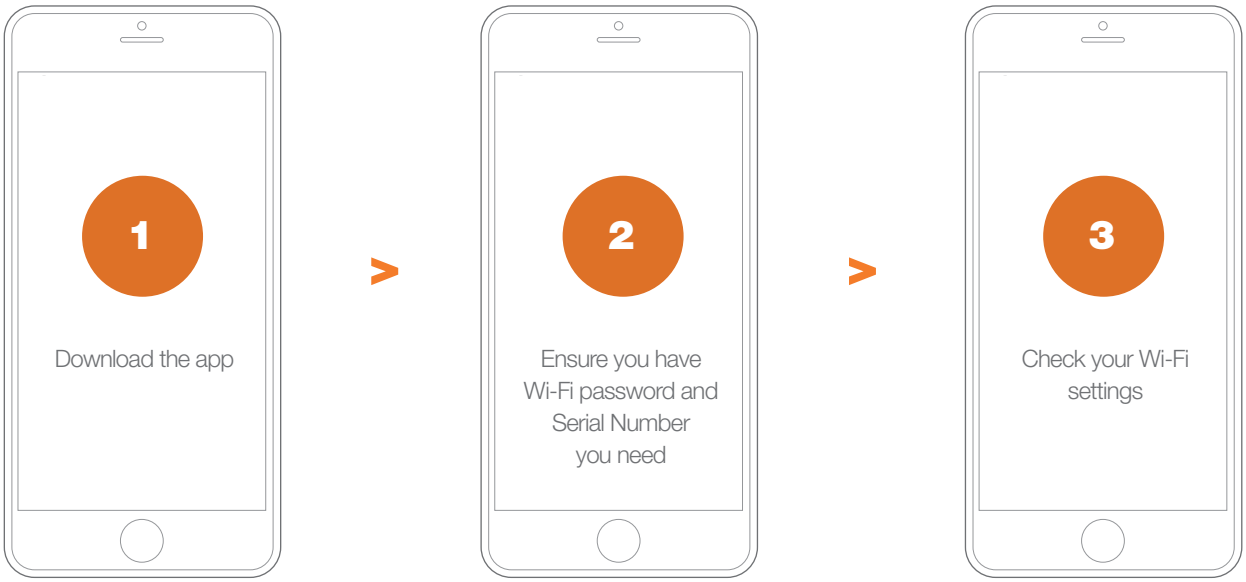


### 1. Dowload the app

Download the free Landroid app first. Get it from Android (4.4.2 or higher) or Apple (iOS 11 or higher) app stores

GET IT ON Google Play

Available on the App Store

### 2. Ensure you have:

- Your WiFi network password
- Landroid Serial Number: it can be found in the label under the rear bonnet of the machine.
  If you don't want to type the 20-digit Serial Number, input it by scanning the QR code with your smartphone's camera.

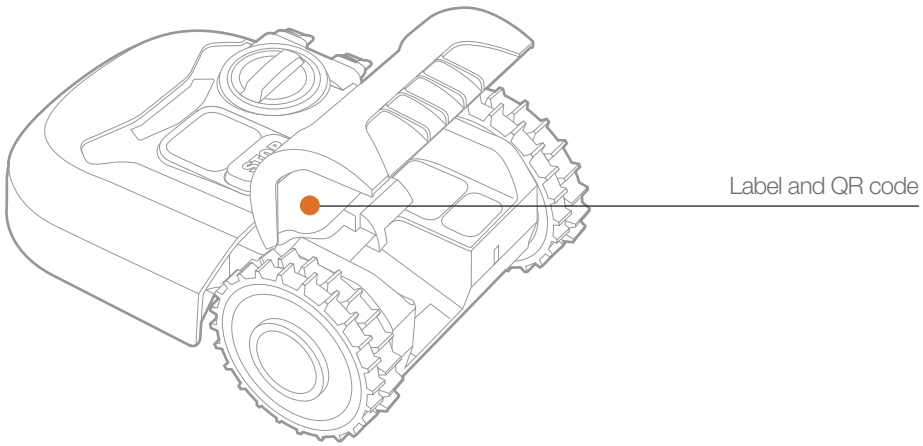

### 3. Check your Wi-Fi settings

- Landroid works with 2.4GHz Wi-Fi signal
- Make sure your Landroid is in the same router environment as your smartphone
- Make sure the distance between your Landroid, smartphone and your router is as close as possible during connection

**Tip:** when Landroid moves to an area of your lawn with poor or no Wi-Fi signal, instructions sent from the app will only be executed when Landroid returns to an area with good signal.

## HOW TO CONNECT LANDROID TO THE INTERNET

Launch the app and follow these instructions.

### 1. Register your account

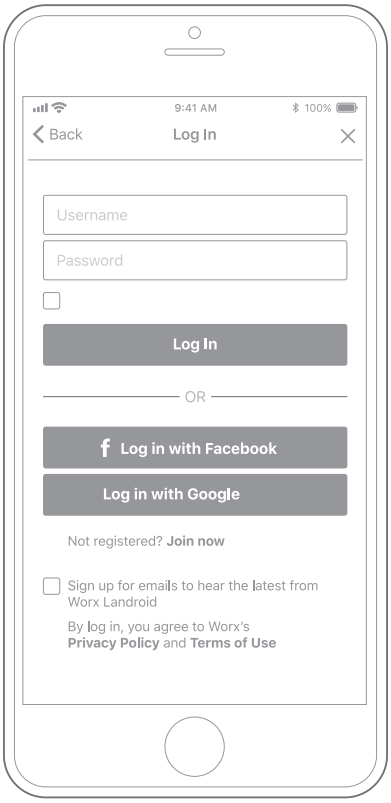


Register your account by typing your username and password, or logging in through Facebook or Google.

### 2. Input Landroid Serial Number

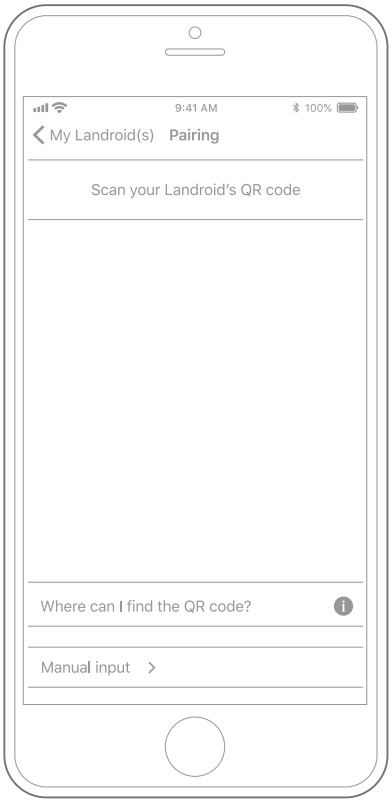


Register your Landroid by inputting the Serial Number manually or by scanning the QR code.

### 3. Choose your connection

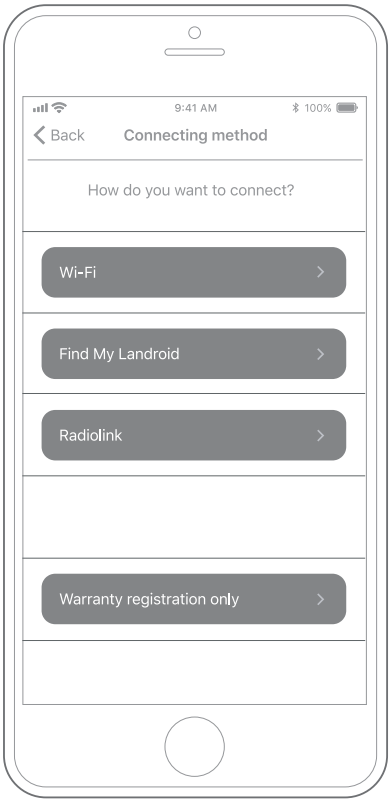


Select your Wi-Fi network or you can connect Landroid via Find My Landroid or RadioLink Options

If your WiFi does not cover the entire lawn you may consider the purchase of the Landroid Radio Link option, which extends the signal up to 500m in range.
As an alternative, you can purchase the Find My Landroid option that besides connecting Landroid to the internet via its build in SIM card, also allows you to track it in the unfortunate event it gets stolen.

# LANDROID APP
# NOT A SIMPLE REMOTE CONTROL

Don't think at it as a remote control. The app is an integral part of the Worx Landroid advanced ecosystem based on cloud computing and artificial intelligence.

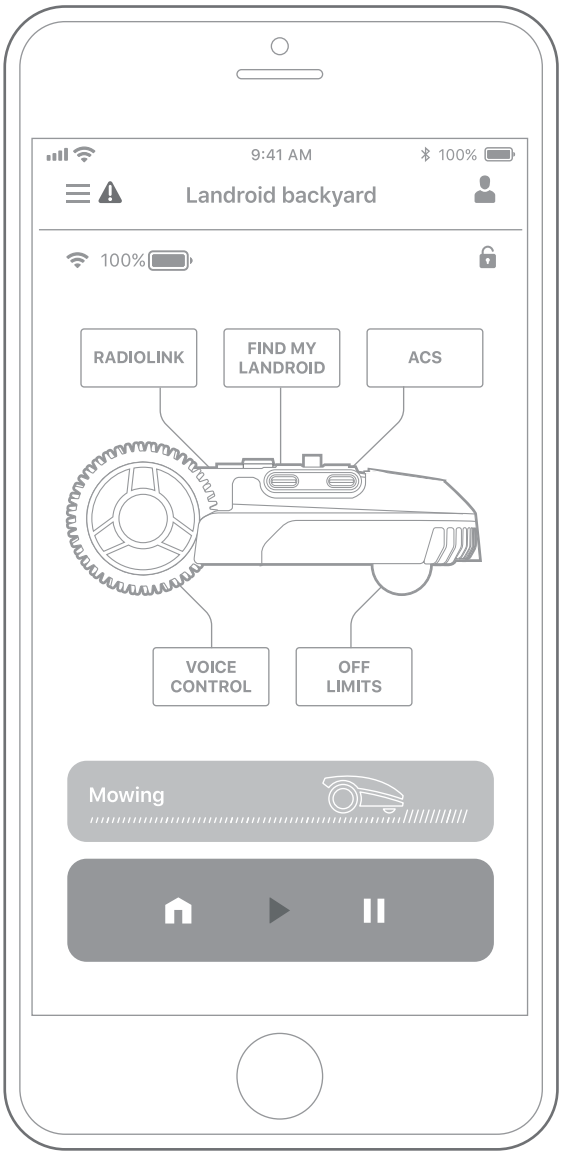


Thanks to the app's augmented reality feature, you can measure the exact area of your lawn. It's as easy as taking a walk along its border.

You can use the app to upload information on your grass species, soil type and irrigation. These inputs, in combination with weather data and lawn size, will allow our cloud computing to tailor-make your Landroid's working schedule to the actual growth of your grass, everyday.

The app also lets you view statistics on what Landroid has been doing for you.

If you ever need to get your Landroid serviced, you can even open a service ticket by using the app.

The app also notifies you when there's new software available for Landroid to download automatically over the air.

Once connected, Landroid can access its unique auto scheduling instructions from the cloud and is able to download the latest software to optimise its performance.

# CONFIGURE LANDROID TO YOUR SPECIFIC NEEDS

You can supercharge your Landroid model with five unique options that can optimise the performance of Landroid to fit your unique garden and your individual needs. Here is a quick overview—for more information visit our website.

## ACS
Anti Collision System

Intelligent obstacle avoidance with ultrasonic sensors.

- Conventional robotic mowers are blind. They bump into objects and can easily get lost. Daily bumps also damage your trees, plants and outdoor furniture. A Landroid fitted with the ACS option avoids all this: it steers effortlessly through obstacles
- Landroid uses automotive-grade ultrasonic sensors to detect obstacles. Using this object awareness, Landroid's auto-pilot technology steers to avoid them

## VOICE CONTROL

Give simple instructions via voice control instead of having to hit keys.

- Voice-activated personal assistants like Amazon Alexa or Google Assistant only work with internet connectivity. This is why we have developed an advanced voice control that does not need the internet
- With the Voice Control option added you simply push the large red stop button and Landroid asks you simple questions. Based on your reply, Landroid behaves accordingly. It's as simple as that

## OFF LIMITS

The Off Limits option creates a boundary around areas of your lawn without the need to connect with your main boundary wire.

- You can use it to greatly simplify the installation of Landroid by removing the need to surround inner areas with the main boundary wire
- It's also great for making areas of your lawn temporarily off limits. For example, with seasonal equipment like a trampoline
- Or, you can make a permanent change to your lawn without disturbing your original Landroid boundary wire

## FINDMY LANDROID

Protect your Landroid from theft using GPS combined with a mobile signal. Thanks to its cellular module, this accessory also eliminates the need for Wi-Fi or RadioLink to stay connected to the internet at all times.

- If your Landroid is taken outside its geofenced area, you will get immediately notified on your smartphone via the Landroid app. You will be able to lock the robot and track it. The GPS module will work even if the main battery is removed
- Find My Landroid provides data connectivity with its multi-IMSI SIM card that works with a multitude of telecom providers, ensuring the best possible signal all the time

## RADIOLINK

Regular domestic Wi-Fi networks typically only cover a fraction of the entire garden— RadioLink solves this. It create a bomb-proof radio connectivity that extends as much as 500 meters from your Wi-Fi router.

- Unleash the full potential of your Landroid's advanced Artificial Intelligence with constant online connectivity thanks to the RadioLink option

# MAINTENANCE

Your Landroid works hard and needs to be cleaned and checked from time to time. This section of our guide helps you keep Landroid in good shape so it can last for years without troubles. Here's how to take care of your Landroid

## KEEP IT SHARP

Landroid does not cut grass like other mowers. Its cutting blades are razor sharp on 2 edges and rotate in both directions for maximum cutting capacity.

- The blade turning disc makes a clockwise and counterclockwise rotation at random to use both cutting edges and minimize the frequency of replacing the blades
- Each cutting blade will last up to 2 months when it is programmed to mow every day
- Always check to see if the blades are chipped or damaged and replace them if they are
- When the cutting blades are dull and worn out, they should be replaced with the spare blades provided with your Landroid. Spare blades are also available at your nearest Landroid retailer

⚠ **WARNING!** Before cleaning, adjusting, or replacing the blades, turn your Landroid OFF and remove the battery. Always wear protective gloves.

### Replacing the Blades

Remove the battery (fig. 1) and gently flip the Landroid over (fig.2)

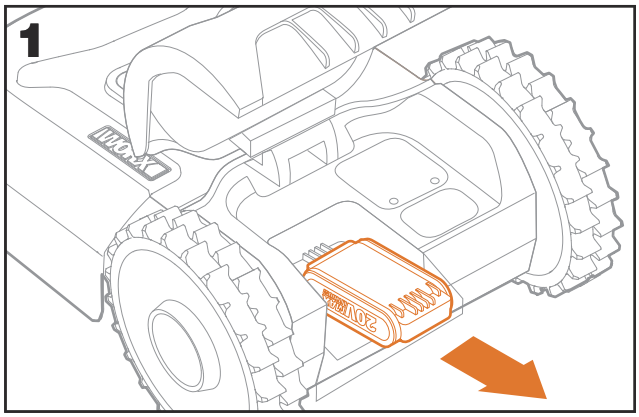


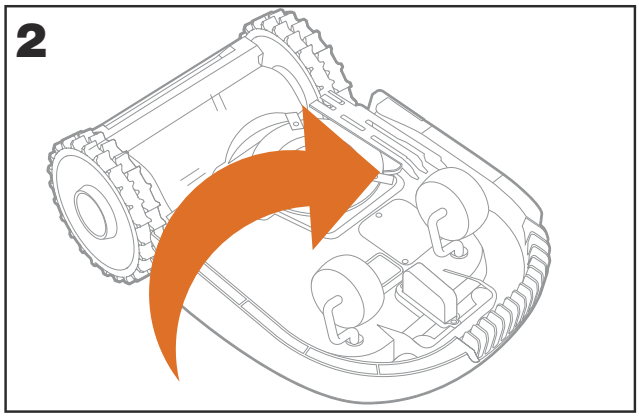


Take the screws off the blades with a screwdriver (fig. 3 - 4)

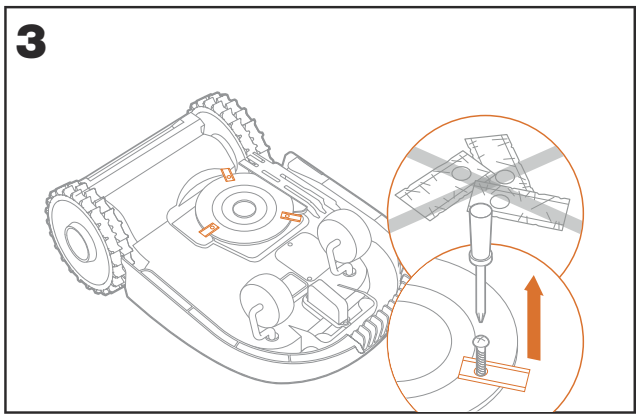


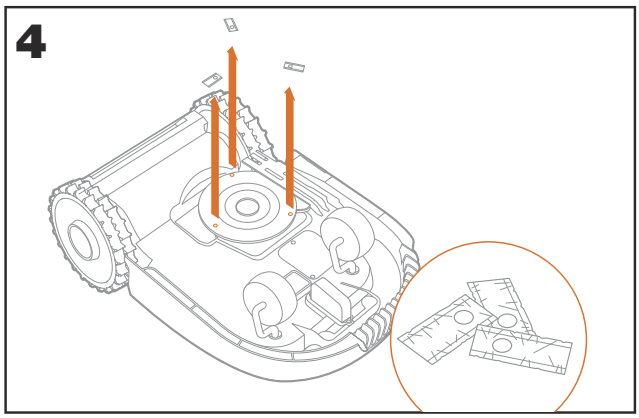

Firmly screw on the new blades (fig. 5 - 6)

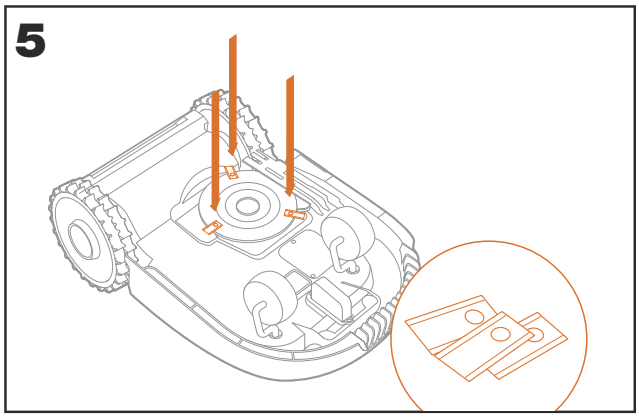


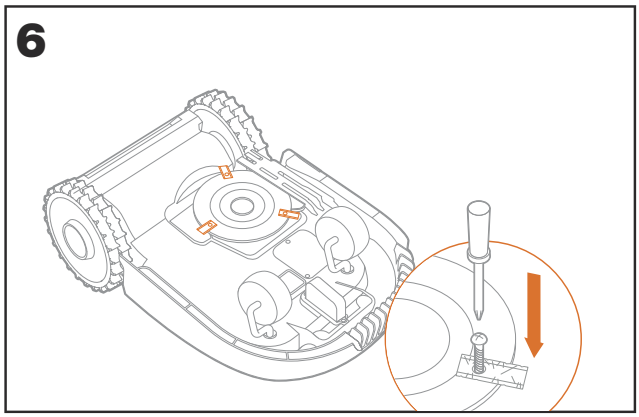


Refit the battery (fig. 7)

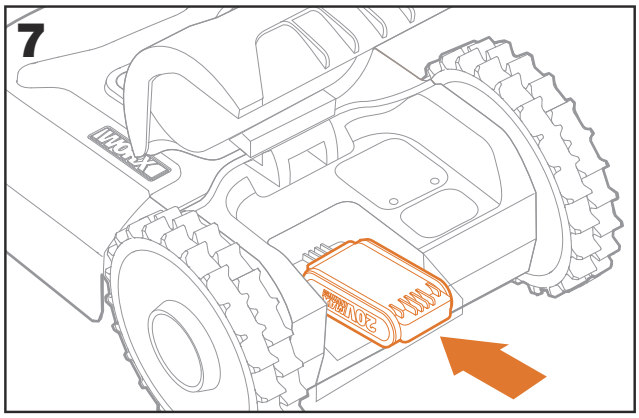


⚠ **Attention:** When fitting new blades, make sure you replace ALL the blades.

- Always use new screws when fitting blades. This is important to ensure blade retention and balance the blade turning disc. Failure to use new screws could cause serious injury
- Important: After screwing the blade to the blade disc, make sure the blade is able to spin freely

## KEEP IT CLEAN

Your Landroid should be cleaned regularly. This helps keep it in good condition, especially removing dirt, debris and the build-up of grass from daily mowing. Turn Landroid off before cleaning it. For extra safety, remove the battery.

⚠ **WARNING!** DO NOT use a hose, high pressure washer or otherwise pour running water on your Landroid. High pressure water can go inside the sealings and damage electronic and mechanical parts.

### Cleaning the upper body

- Clean with a spray bottle filled with water. Don't use solvents or polishers
- Use a brush or a clean cloth to remove built-up dirt

### Cleaning the Bottom

- Flip Landroid upside down
- Remove debris and grass clippings using a brush to remove
- Be careful not to touch the blades with your hands. Wear gloves for protection
- Clean the blade disc, the chassis and the front wheel(s) thoroughly with a soft brush or moist rag

- Rotate the blade disc to ensure it rotates freely. Remove any obstructions. Remove any lodged debris so that they don't cause a crack in the blade disk. Even the tiniest crack effects mowing performance
- Check the blades spin freely around the fixing screws. Remove any obstructions

**Cleaning the drive wheels**
- Remove mud from wheels with a brush in order to ensure good grip of the tread

**Clearing the charging contacts**
- Clean the contact pins located on the charging base and the charging strips located on the Landroid using a cloth
- Periodically remove any build-up of grass clippings or debris around the contact pins and the charging strips to ensure Landroid successfully charges each time

## KEEP IT CHARGED

The heart of Landroid is its 20V Li-Ion Worx Powershare Battery.
- For the proper storage of the battery, make sure it is fully charged and kept in a cool dry place between -20°C~60°C
- The recommended Landroid operation temperature is between 0-55°C
- The life-span of Landroid's battery depends on hours of usage and the length of use per day during the mowing season

**Battery maintenance during storage**
- Landroid can be charged manually without the boundary wire
- Connect the charging base to a suitable power supply. The green light on the charging base will turn on
- Manually dock Landroid into the charging base while Landroid is powered off
- The green light on the charging base will flash and Landroid will begin to charge
- When the battery is fully charge, the green light will turn solid green

## KEEP IT STORED OVER THE WINTER

Although Landroid is designed and built to survive the most severe weather conditions, we recommend storing it in your shed or garage during the winter. To prepare it for winter hibernation:
- Clean it thoroughly
- Fully charge the battery
- Turn the power off

**Getting back to work in the Spring**

When it is time to re-start Landroid for the new season, please perform the following checks:
- Update the time and date settings via the app
- If you notice signs of oxidation on the charging contacts of Landroid and the charging station, clean these with a fine grade emery cloth
- Full charge Landroid's battery before operating

## KEEP IT UPDATED

Landroid is always improving and new software versions are made available for free. Always keep Landroid software updated to make the most of your machine.

**Over-the-Air (OTA) updates**

If your Landroid is connected to your Wi-Fi network, you will be notified that new software is available via the app. Once you confirm, the update will happen automatically Over-the-Air.

### Check which software version you have

The software version is always displayed on the left hand side of the display when you start up Landroid. You can also easily check which software your Landroid has via the app.

You can also check it by going into the General Settings menu.

- Press OK to select the gear icon
- Scroll down the menu with the down arrow key (B) to Diagnose option
- Press OK and you will see the Software version displayed again

### Manual updates

- If your Landroid is not connected to your Wi-Fi network, you can still update it to the latest software version with a USB stick
- Regularly visit the Worx Landroid website to check if any new version is available. If you subscribed to Landroid email list, you will be notified when a new version is available
- Download the latest software version at our website
- Unzip the file on your computer
- Take a blank USB stick formatted in FAT32
- Save the unzipped Landroid software to the USB stick
- Place Landroid on a secure and level surface
- Turn off Landroid
- Go to the rear of the Landroid to access the USB port. See **page 7** of this manual to locate it
- Insert the USB stick in the port
- Place the Landroid on the lawn again, inside the working area delimited by the boundary wire
- Turn on Landroid
- Without lifting Landroid, remove the USB stick according to the screen tips
- The update will begin automatically and may take a while. Landroid will restart automatically after the update is completed

⚠ **NOTE:** if Landroid is not inside the boundary wire, the message 'Outside working area Press START to reset' will be displayed. Make sure Landroid is within the boundary when restarting Landroid.

# LANDROID CONTROL PANEL

**Advanced functions via the built-in interface**

Despite its minimalistic design, you can set several advanced functions through the built-in control panel.
However, for the best user experience we recommend you use the free Landroid app to do this, given its much richer and intuitive interface.

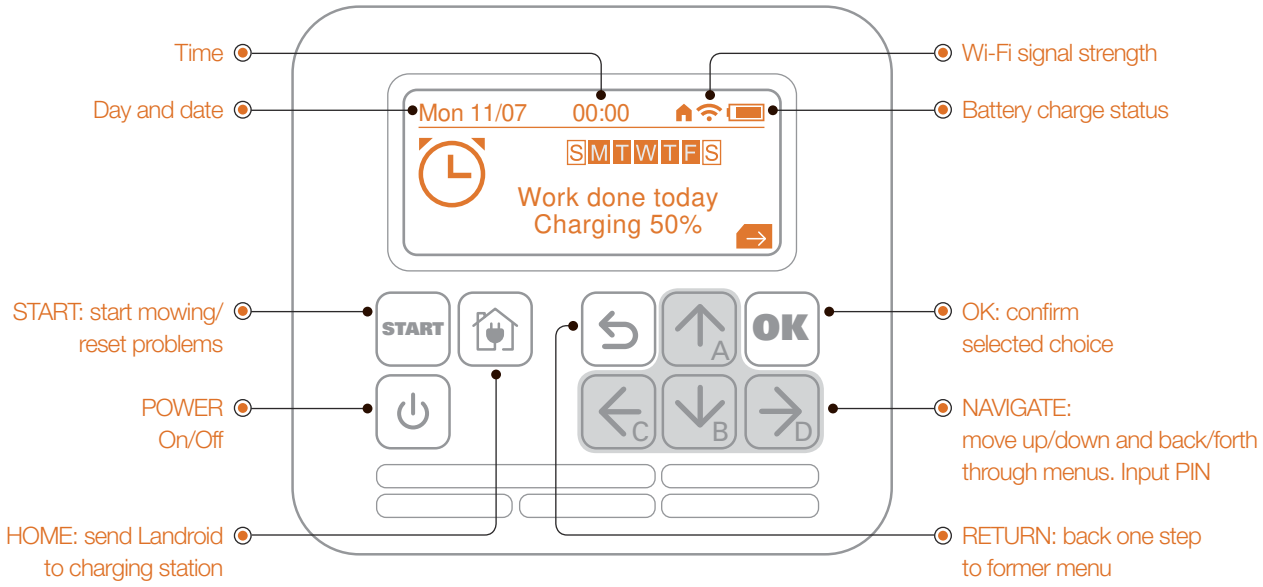


**Choose your time format of preference — 24h or 12h (AM/PM)**

- Turn on Landroid and insert PIN
- Press the → (D) key; screen displays the menu
- Select the gear icon with the navigation keys, confirm with OK button
- Scroll down to 'Time format' using the ↑(A) and ↓(B) keys. Press OK to confirm
- Select your option between '24 hour' and '12 hour' using the ↑(A) and ↓(B) keys
- Press OK to confirm your option

**Choose your Date format of preference**

- Turn on Landroid and insert PIN
- Press the → (D) key; screen displays the menu
- Select the gear icon with the navigation keys, confirm with OK button
- Scroll down to 'Date format' using the ↑(A) and ↓(B) keys. Press OK to confirm
- Choose among the three options YYYY/MM/DD, DD/MM/YYYY and MM/DD/YYYY using the ↑(A) and ↓(B) keys
- Press OK to confirm your option

**Date and Time setting**

- Turn on Landroid and insert PIN
- Press the → (D) key; screen displays the menu
- Select the gear icon with the navigation keys, confirm with OK button
- Scroll down to 'Set date & time' using the ↑(A) and ↓(B) keys. Press OK to confirm
- Date is highlighted
- By pressing OK, the first digit highlights
- Use the ↑(A) and ↓(B) keys to change the highlighted digit
- Use the ←(C) and →(D) arrows to select other digits of the date
- Use the ↑(A) and ↓(B) keys to input a new value
- Press OK to confirm the date
- Move down to time with the ↓(B) key. Time gets highlighted. Press OK to select
- Change the time with the same procedure as for the date. Press OK to confirm
- Time and date have now been set

# ADJUSTING THE MOWING TIME

Landroid creates its own automatic schedule and working time based on the size of your lawn and other factors. Our recommendation is not to manually adjust these settings. However, there are 3 ways to adjust the mowing time if you want to.

**1.** Use the app and follow the simple on-screen menus

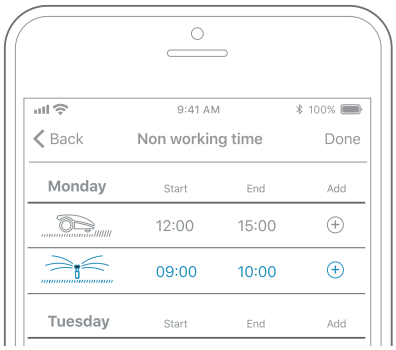


**2.** Adjust the working time percentage via Landroid's control panel

Depending on the growth rate of your grass, you may want Landroid to work a little harder or a little less. You can adjust the working time in percentage increments and Landroid will recalculate its working time automatically.

- Turn on the mower and insert PIN code
- Press the ↑(A) key or the ↓(B) key to adjust the working time in 10% increments
- Landroid will now automatically calculate a revised working time

**3.** Specifically adjust each day

Landroid is factory set to automatically start at 09:00am each day, but you might want to adjust this. Here's how.

- Turn on Landroid and insert PIN code
- Press the → (D) key
- Scroll with the ←(C) and → (D) keys to the clock icon and press OK to confirm
- Now you are in 'working time' menu
- Select 'Auto Work Time' and press OK
- Select size of your lawn in $m^2$ by scrolling with the ↑(A) and ↓(B) key and choosing the right size
- Press the Return key to go back to 'working time' menu
- Now select 'Customise work time' option, press OK
- Days of the week will appear with working time in hours and minutes
- Now select a day of the week, press OK
- Now a working time menu will appear for that day
- Press OK to make the time digits flash
- Select new start time in hours and minutes by pressing the ←(C) and →(D) arrows. You can change hour or minute time values using the ↑(A) and ↓(B) keys
- Then select new stop time in hours and minutes. Then press OK to confirm
- When successful you will see the total working time for that day has been updated based on the start and stop times that you have input
- To change the start time for other days of the week, go back to the previous customize working time menu and repeat the steps above

Please note that because Landroid is autonomous, if you select 'Auto Work Time' you will reset any customized working times you might have programmed erlier.

**Rain Delay Change**

If you live in an area of high rainfall, it might be useful to adjust the rain delay setting to allow Landroid to operate when it is wet. To do this follow these steps:

- Turn on Landroid and insert PIN code
- Press the → (D) key and press OK to select the gear icon into the 'General Settings' menu
- From the 'General Settings' menu go to 'Rain start delay' option by pressing the ↓(B) key, then press OK
- You will now see the default rain delay of 180 min. Press OK to edit this timing
- You can use the ←(C) and →(D) arrows to select the digits and ↑(A) and ↓(B) arrows to increase or decrease the rain delay
- To remove the rain delay completely, select 000 min.
- Then press back button to exit

**Setting up different zones**

Landroid is designed for mowing complex lawns evenly. Nevertheless, sometimes you might need to adjust the working time in each zone. To set this feature up, first you must define these different zones of your garden (up to a maximum of 4) and then you can adjust the working time in each one. To define each zone follow these steps:

- Start with Landroid in its charging base
- Turn on Landroid and insert PIN code
- Press the → (D) key and select clock icon and press OK to confirm
- Now you are in working time menu
- Scroll down to 'Define zones' option. Press OK
- You can select up to 4 zones
- Select the number of zones you want and press OK
- Now the display prompts you to press START to set up the zone
- As soon as you press START, the mower will start to follow the wire
- Press STOP as Landroid reaches the zone you want to mark as Zone 1
- Save your choice by selecting YES
- Press START to make Landroid reach the following zone, then press STOP when it reaches zone 2.
- Repeat the steps above if you need more zones to be defined

**Customise working zones**

To customise the working time in each zone:

- Turn on Landroid and insert PIN code
- Press the → (D) key
- Scroll with the → (D) key to the clock icon and press OK to confirm
- Now you are in working time menu
- Scroll down with ↓(B) key to 'Working time adjust' and press OK
- Numbered zones will appear
- Zone 1 will have a prompt to input the working area in $m^2$ and the working time percentage for this zone
- Use the ↑(A) and ↓(B) arrows to input the working area in $m^2$ then press OK
- Then the cursor moves to the working percentage
- Here you can adjust the percentage
- You can then scroll to the next zone using the ←(C) and →(D) arrows to adjust the size and working time of the Zone 2
- Then press back button to exit
- Please note the sum of the percentages of all zones must equal 100%

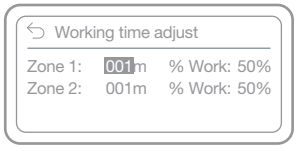

This section contains a guide on operation and potential error messages Landroid displays. There is also a troubleshooting section at the end that is designed to help you understand and solve any issues.

# OPERATION MESSAGES

| MESSAGE | LANDROID ACTION |
|---|---|
| Cutting grass | Cutting grass according to the mowing schedule. |
| Raining | The rain sensor detects water. Landroid will return to the charging base and stay there for the time you have programmed it to do so. When dry, Landroid will automatically begin the rain delay countdown and then return to mow. If you want Landroid to mow before this, simply turn it off then on again, but only when the rain sensor is dry, or you can remove the rain delay completely by setting the rain delay time to zero. |
| Going home | Needs to recharge—during the journey to the base, the cutting blade is stopped in order to save energy. |
| Charging | 'Charging' and charge percentage are displayed. |
| No working time scheduled | Stand-by, needs to be programmed as desired. |
| Not working today | Stand-by, will start according to mowing schedule. |
| Work done today | |
| Zone searching | According to the setting of 'Customize work zone', Landroid is searching a certain area to mow. |
| Charge complete | Landroid has completed its charging. |
| Emergency charge | Landroid is charging in a powered-off state. |

# ERROR MESSAGES

Sometimes things can go wrong. Fortunately Landroid is smart enough to tell you if it is enountering an issue, so you can fix it. If in doubt, please visit our website where you will find useful videos and further support.

| MESSAGE | CAUSE | ACTION |
|---|---|---|
| Outside working area! Press START to reset. | Landroid cannot find the boundary wire signal. | 1. If Landroid is actually outside of its working area: turn power off, take Landroid inside the working area, turn the power on and press start.<br><br>2. If Landroid is inside its working area check if the LED on the charging base is solid green. If red, check if the boundary wire is properly connected to the charging base and that the base is connected to a suitable power supply. If they are properly connected, the boundary wire terminals are clamped incorrectly and must be reversed. |
| WRONG PIN! Please retry. | PIN code is wrong. | Input the correct PIN or re-set your PIN. |
| Blade motor fault! Press START to reset. | Blade disc is blocked by an object, e.g. a branch. | Turn power off.<br><br>Turn Landroid upside down and check if there's anything preventing the blade disc from rotating and remove any obstruction.<br><br>Turn Landroid upright.<br>Turn power on. Press start. |
| | Blade is over-loaded by thick dense grass. | Turn power off.<br><br>Take Landroid to an area with short grass or adjust the cutting height to a higher setting.<br><br>Turn power on. Press start. |
| Wheels motor fault! Press START to reset. | Wheel motor is blocked in some way. | Turn power off and take Landroid to an area free from obstacles.<br>Turn power on. Press start.<br><br>If the error message is still displayed, turn power off. Turn Landroid upside-down and check if there's anything preventing the wheels from rotating.<br><br>Remove any obstruction, turn Landroid upright, turn power on. |

| | | |
|---|---|---|
| Upside down! Press START to reset. | This could have happened when Landroid came into contact with a sloping surface which made it overturn. | Turn Landroid upright and remove any obstacle that might have caused Landroid to overturn. |
| Mower trapped! Press START to reset. | Landroid is trapped. | Turn power off.<br><br>Take Landroid to an area of your lawn free of obstacles, then turn power on. Press start.<br><br>If the error message is still displayed: turn power off, turn Landroid upside-down. Check if there is anything preventing the wheels from rotating.<br><br>Remove any obstruction, turn the Landroid upright, turn power on. |
| Mower lifted! Press START to reset. | Landroid is lifted up. | Turn power off.<br><br>Take Landroid to an area clear of obstacles, turn power on. Press start.<br><br>If the error message is still displayed: turn power off, turn Landroid upside-down and check there's anything that can cause Landroid to be lifted up.<br><br>Remove any possible object, turn Landroid upright, turn power on. |
| Battery voltage too low! Please change battery. | Battery exausted. | In this case you must turn Landroid off and place it in the charging base, then 'Emergency charging' will be displayed and it will start charging.<br>If the battery error still persist, your battery is damaged and need to be changed. |
| Wire missing! Press START to reset. | Machine can't find boundary wire signal. | If the LED light is red, check if the boundary wire is well connected to the clamps on the charging base.<br>If the problem persists, check that the boundary wire hasn't been cut. |
| Battery temperature out of range! Please wait. | Temperature is too high (more than 55°C) when charging. | Place the charging base in a shady area or wait until the temperature has cooled down. |

| | | |
|---|---|---|
| Can't find charge station press START to reset. | Boundary wire is beyond its maximum length (350m or machine doesn't have enough power to go back to charging station. | Take Landroid to the charging station. |
| Mower locked! | With the 'Lock Function' enabled, if your Landroid does not receive a signal from your Wi-Fi router for 3 days, then it gets locked as a security measure.<br><br>This could be because your router lost its power or because you changed your Wi-Fi router or network provider. | Please reconnect Landroid to the Wi-Fi networtk it has been originally paired with.<br><br>If this is not possible, contact Cutomer Service. |

**NOTES**

- Before turning power on, always check Landroid is inside its working area. If not, the message "Outside working area! Press START to reset" will be displayed. This message is also displayed when Landroid is partly but not completely inside its working area
- If for any reason—i.e. a party, children playing...—you want to park your Landroid in the charging base: press home then OK. Landroid will go to its base and stay there. Please note Landroid will now wait until the next scheduled mowing session. If you want to re-start it at anytime, press start then OK to start your Landroid
- If an error repeatedly occurs in the same area of your lawn, you might have a problem with the boundary wire so please refer to the installation instructions and check your set up is correct with its help
- If your lawn is divided in two separated areas, connected by a corridor less than 1m wide, one of which is not provided with the charging base: when Landroid runs out of charge, take it manually to the charging base
- If Landroid runs abnormally once in a while, please reset it by turning it off and removing the battery for 30 seconds, then restart it. If the problem cannot be solved, please contact our Customer Service for help

# TROUBLE SHOOTING

If your Landroid does not work correctly, follow the trouble shooting guide below. If the fault persists, contact Customer Service.

| SYMPTOM | CAUSE | SOLUTION |
|---|---|---|
| The LED light on the charging base does not turn on. | There is no power. | Check the charging base is connected properly to the charger and the charger is connected to a suitable power supply. |
| Red light on the charging base. | The boundary wire isn't connected. | Check that the boundary wire has been connected correctly to the charging base. Check there are no breaks in the boundary wire. |
| Landroid turns on, but the blade disc does not spin. | Landroid is searching for the charging base. | This is normal: when Landroid needs to recharge, the blade disc does not rotate while it is searching for the charging base automatically. |
| Landroid vibrates. | The blade disc is unbalanced. Blades may be damaged. | Check the blades and replace them if damaged. Remove debris and foreign objects from the blades and blade disc. |
| Grass is being cut unevenly. | Landroid does not work enough hours per day to cut the grass. | Try adding more hours to the mowing schedule. |
| | Mowing area is too big for the size of Landroid you have. | Try decreasing the size of the mowing area. |
| | The blades are dull and not sharp. | Change all the blades and screws in order to balance the bade disc. |
| | The cutting height is set too low for the length of the grass. | Raise the cutting height and then gradually lower. |
| | Grass or another object has wrapped around the blade disc. | Check the blade disc and remove any grass or other objects that might prevent it spinning. |
| | There is a build-up of grass in the blade disc or motor frame box. | Make sure the blade disc rotates easily. If need be, you may take off the blade disc and then remove the debris. |
| Your Landroid is inside its working area and the boundary wire is connected, but the display says 'Outside working area! Press START to reset' | The boundary wire ends are clamped incorrectly. | Reverse the boundary wire ends and reconnect to the charging station. |

| | | |
|---|---|---|
| The charging time is far more than the rated charging time. | Poor connection caused by debris on the charging strip. | Clean the contact pins located on the charging base and the charging strip on Landroid using a cloth. |
| | The charging protection program is activated due to high temperature. | Place the charging base in a shady area or wait until the temperature has cooled down. |
| The mower does not charge. | There is no power. | Check the power cord is connected properly to the charger and the charger is connected to a suitable power supply. Make sure both the charging strips on the mower touch the centre of the contact strips on the charging base. |
| Landroid is starting to have shorter run-times between charges. | Something is clogging in the blade disc creating friction and increasing power consumption. | Take off the blade disc and clean it. Maybe the grass is too high and too thick. |
| | Landroid is shaking heavily because the blade disc is unbalanced. | Check the blade disc and blades, remove debris and foreign objects from the blades and blade disc. Replace the blades with a new set. |
| | The battery may be exhausted or old. | Replace battery. |
| Landroid is not operating at the correct time. | The clock is not set to the correct time. | Set the clock to the correct time. |
| | Programmed cutting times for Landroid are not correct. | Change the time settings for the mower to start and stop. |
| Landroid cannot correctly dock with the charging base. | Environmental influences. | Restart Landroid. |
| | Poor connection caused by debris on the charging strip. | Clean the contact pins located on the charging base and the charging strip on Landroid using a cloth. |
| The green light on the charging base turns on before charging is complete. | The charging base is overheating. the display says ‘Battery temperature out of range! please wait’. | Place the charging base in a shady area or wait until the temperature has cooled down. |
| Landroid wheels skid or repeatedly slip. | Foreign obstacles, such as twigs and branches may be lodged under Landroid. | Remove foreign objects from underside of Landroid. |
| | The lawn is too wet. | Wait until lawn has dried. |

| | | |
|---|---|---|
| Landroid runs outside the boundary wire.<br><br>Landroid does not mow an area within a boundary wire zone.<br><br>Landroid reverses or rotates erratically near the boundary wire. | The boundary wire of another Landroid or robotic mower is positioned too closely. | Ensure at least 1m clearance is provided in between your boundary wire and that of your neighbor. |
| | In wet conditions, the boundary wire electric signal may leak where the wire has been joined or repaired incorrectly. | Check boundary wire joints. Insulate to provide a fully waterproof connection. |
| | There is boundary wire electric signal leakage due to broken insulation. | Repair damaged boundary wire with the wire connectors supplied. |
| Landroid slips out of its working area going down a hill. | Low grip of Landroid drive wheels. | Please check the wheels are clean and free of mud in order to have the maximum grip possible. |
| Landroid operative system crashes when charging or on standby. | Software or display fault. | Restart Landroid. |
| Landroid shuts off when docking in the charging base. | Landroid fails to charge due to over temperature protection and is powered off. | Place the charging base in a shady area or wait until the temperature has cooled down. |
| | Poor connection. | Check the LED light on the charging base.<br><br>Check the connection between the contact pins located on the charging base and the charging strip. |
| Landroid stops in the working area. | There is an obstacle in the working area. | Remove the obstacle from Landroid's working area. |
| | The cutting height is set too low for the length of the grass or the grass is too dense. | Raise the cutting height and then gradually lower. |
| | The extended boundary wire should not exceed 350m or it may cause signal problem. | Reduce the lenght of the boundary wire. |
| | The distance between the center of the lawn and the boundary wire should not exceed 25m or it may cause signal attenuation. | Reduce the distance between the center of the lawn and the boundary wire perimeter within 25m. |
| Landroid flips over. | There is an inclined obstacle on the lawn. | Exclude the obstacle from Landroid's working area. |

| | | |
|---|---|---|
| Landroid fails to connect to the internet. | Please check your router has the correct settings. | Make sure your router is 2.4GHz. If your router has two settings, please enable the 2.4GHz band.<br><br>Make sure your router is set to 802.11 mode and wireless setting is b/g/n mixed.<br><br>Make sure your router has the SSID Broadcast function enabled when you connect the machine with the app. You can close it after you connect successfully.<br><br>Make sure DHCP function is enabled.<br><br>If you changed your Wi-Fi network, you need to connect Landroid to the new network.<br><br>If you have a “Fritz!box” router, please make sure activate “Allow communication between devices in same network” in the settings. |

**Environmental protection**

Waste electrical products should not be disposed of with household waste. Please recycle where facilities exist. Check with your Local Authority or retailer for recycling advice.

# TECHNICAL DATA

| SPECIFICATIONS | WR140E |
|---|---|
| Rated voltage | 20VMax.* |
| No load speed | 2800/min. |
| Cutting area | 1000m² |
| Cutting diameter | 18cm |
| Cutting height | 30-70mm |
| Cutting height positions | 5 |
| Battery type | Lithium-ion |
| Battery model | WA3553.3 |
| Charging time approx | 70min. |
| Charger model | WA3751 |
| Charger rating | Input: 100-240V~50/60Hz, 90W,<br>Output: 20V, 3.0A |
| Machinery weight | 9.6kg |
| Protection degree | III |
| App | Yes |
| Frequency band of embedded WLAN module | 2.14GHz-2.484GHz |
| Max. radio-frequency power of embedded WLAN module | 802.11b:+16±2dBm(@11Mbps)<br>802.11g:+14±2dBm(@54Mbps)<br>802.11n:+13±2dBm(@HT20,MCS7) |

*Voltage measured at no load. Initial battery voltage reaches maximum of 20 volts. Nominal voltage is 18 volts

**Noise data**

A-weighted sound pressure LpA = 45.5 dB (A), KpA= 0.6 dB(A)
A-weighted sound power LwA = 65.5 dB (A), KwA= 0.6 dB(A)